Series Cannoli Satin Copper

Concealed thermostatic set

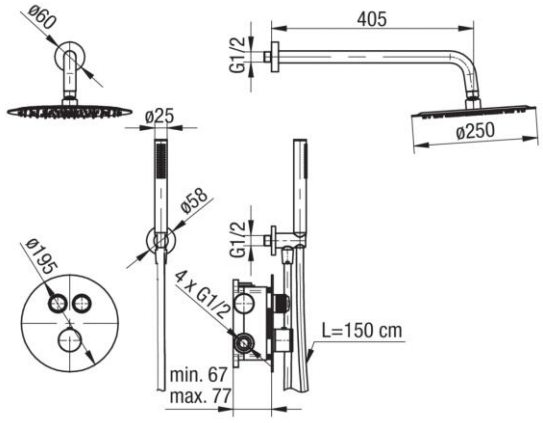

Code	Flow class	EAN13
2424990-SCPV	S/S	5902273585787

Product usage:
For use in with cold and hot water systems in buildings

Type:
Shower sets

Guarantee:
25-year

Technical data/Operating parameters:
Max pressure: 1,0 MPa,
Max temperature: 70°C

Used materials:
- shower head ø250mm
- spray arm 405mm
- concealed thermostatic tap
- water inlet angle valve
- 1-function shower hand
- shower hose

Finish:
satin copper PVD