## Series Cannoli Satin Copper

### Concealed bidet mixer

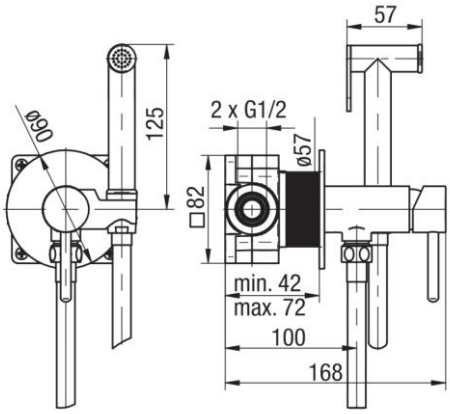


| Code | Cartridge | Flow class | Connection | EAN13 |
|---|---|---|---|---|
| 2424910-SCPV | cartridge Φ25 | Z | G1/2 | 5902273585190 |

**Product usage:**
For use in with cold and hot water systems in buildings

**Type:**
Bidet mixers

**Guarantee:**
25-year

**Technical data/Operating parameters:**
Recommended working pressure: 0,1-0,5 MPa,
Max temperature: 70°C

**Used materials:**
brass

**Finish:**
satin copper PVD